Japanese Journal of Physiology, **39**, 1–19, 1989

MINIREVIEW

Direct and Indirect Sensory Input Pathways to the Motor Cortex; Its Structure and Function in Relation to Learning of Motor Skills

Hiroshi ASANUMA and Robert MACKEL

The Rockefeller University, New York, N. Y. 10021, U.S.A.

It is already more than a century since FRITSCH and HITZIG [32] discovered the motor cortex in the dog. The discovery was so sensational that a vast number of experiments were carried out to further elucidate cortical motor function during the following years. In the beginning the effort was focused on delineating the localization of motor function within the motor cortex. Little attention was paid to the sensory input to the motor cortex because suitable techniques for studying it were lacking. With the progress and development of electrophysiological technique, MARSHALL *et al.*[53] succeeded in demonstrating evoked potentials in the monkey sensory cortex in response to tactile stimulation. Shortly following this report, ADRIAN and MORUZZI [1] observed increase of impulses in the medullary pyramid in response to sensory stimulation in lightly anesthetized cats. The latter result suggested that sensory impulses which arrived at the motor cortex could have activated pyramidal tract cells although there was still a possibility that these PT cells were located in the sensory cortex. Several decades later, aided by the newly developed closed chamber method, MOUNTCASTLE [55] examined the details of sensory input to the somatic sensory cortex in unanesthetized cats. He found that each neuron receives precise epicritic information arising from a particular part of the body. Shortly after that discovery, BUSER and IMBERT [22] and BROOKS *et al.* [21] reported similar results in the cat motor cortex.

We subsequently have found that there is a tight coupling between the afferent input to and the efferent outflow from the motor cortex in the cat [8]. In the monkey, however, the results were controversial. While POWELL and MOUNTCASTLE [65] demonstrated that the sensory cortex receives finely grained epicritic input, others [2, 29] reported that this was not the case for the motor cortex. It was reported that the motor cortex receives input mainly from deep receptors, and not the well-localized tactile input which impinges onto the sensory cortex. These early findings differed from our own observations. We found that the monkey motor cortex also receives precise epicritic input from the periphery and that the input-output relationship in motor cortical neurons was precisely organized [57, 67]. From

Received for publication December 17, 1988

these data obtained in both cats and monkeys, we established the existence of cortical efferent zones which when activated produce contraction of a particular muscle. These efferent zones themselves receive afferent inputs which are produced by contraction of the target muscles, thus constituting closed loop circuits between the motor cortex and the periphery. These efferent zones are columnar in shape and spread along the direction of radial fibers in the cortex, the diameter of which is around 1.0 mm. These efferent zones are particularly well developed in the distal limb areas forming the shape of overlapping mosaic.

At the time when the input-output relationship was discovered, the sensory input pathway to the motor cortex was unknown. The motor cortex receives its major input from the thalamic area rostral to the sensory relay nucleus, i.e., n. verntralis lateralis (VL) in the cat and n. ventralis posterolateralis pars oralis (VPLo) in the monkey [59]. However, both the dorsal column and the spinothalmic pathways were thought to reach only the thalamic sensory relay nucleus, i.e., n. ventralis posterolateralis (VPL). On the other hand, it was known that the sensory cortex (area 2) projects to the motor cortex (area 4) both in the cat [39] and the monkey [40]. Therefore, it was generally thought that the sensory input to the motor cortex comes through the sensory cortex. On the other hand, it was known that removal of the sensory cortex produces very little motor deficits [79]. Taken together, it was difficult to assign an important functional role to the sensory input to the motor cortex.

Concerning the function of the sensory input to the motor cortex, WELT *et al.* [82] proposed that this input constitutes the basis of tactile placing reaction. The tactile placing reaction was discovered by RADEMAKER [66] and succeeding analysis was made by Bard using the cat [15] and the monkey [16]. This is a reflex elicited in an animal blindfolded and held in the air with legs free. Under these conditions, the slightest contact of any portion of the hand or foot with the edge of a table results in an immediate and accurate placing of the palm or sole on the table. This reaction is abolished by ablation of the somatic sensory or the motor cortex, but does not disappear by removal of the rest of the cortex. Succeedingly, TOWER [77] demonstrated that this reaction disappears by the pyramidal section. ROSÉN and ASANUMA [67] thought the sensory input to the motor cortex serves as the basis of the grasping reaction. The grasping reaction is a reflex described by Denny-Brown in the monkey [27]. This is an orientation of the hand or foot in space such as to bring a light contact stimulus into the palm or sole which is ensued by facile grasping. This reflex also disappears by ablation of the sensory cortex. The characteristics of tactile placing and grasping indicate that these are cortical reflexes which are elicited by somesthetic input.

PHILLIPS [61] proposed an attractive hypothesis concerning the function of sensory input arising from muscle spindle. It is well known that the difference in activity of alpha and gamma motoneurons determines the sensitivity of spindle receptors. Phillips and his collaborators performed a series of experiments [24, 43] to examine the pattern of cortical activation of alpha and gamma motoneurons. Based

on these as well as the reports that group I afferents project to area 3a of the sensory cortex in the cat [60] and the monkey [62], PHILLIPS [61] proposed that input from muscle spindles to the cortex functions as a part of transcortical servoloop that signals the cortex when movement is disrupted and adjusts the discrepancy between the intended and actual movements.

I. DIRECT SENSORY INPUT PATHWAYS TO THE MOTOR CORTEX

As already stated, these speculations described above were based on the assumption that the peripheral sensory input arrives at the motor cortex through the sensory cortex. This assumption was based mostly on anatomy, but there were some physiological studies which supported this interpretation. WIESENDANGER [83] recorded unitary activities of motor and sensory cortical neurons in response to peripheral nerve stimulation in the monkey and reported that the latencies of the responses in the motor cortex were much longer than those in the sensory cortex. From the results, he argued and concluded that the sensory input to the motor cortex comes through the sensory cortex. STRICK [74] studied activities of VL neurons during natural movements. He reported that VL neurons discharged prior to the start of the movements, but these neurons did not receive sensory input from the periphery. On the other hand, there were physiological studies which did not support the interpretation described above. MALIS *et al.* [52] reported that evoked potentials in the hindlimb area of the motor cortex elicited by stimulation of the peripheral nerve did not disappear by removal of the sensory cortex in the monkey, suggesting that the motor cortex receives peripheral input independently of the sensory cortex. This report, however, did not receive attention because of the difficulty of repeating the experiments. Later, THOMPSON *et al.* [76] studied characteristics of neurons in the sensory cortex projecting to the motor cortex in the cat. They reported that neurons at the interrelated regions of the two cortical areas received peripheral input from overlapping or contiguous areas in the periphery. However, blocking of the corticocortical connection by local cooling of the sensory cortex did not alter the receptive field characteristics of neurons in the motor cortex. ROSÉN and ASANUMA [67] reported that the evoked potentials elicited by peripheral nerve stimulation and recorded in the motor cortex did not change their characteristics by cooling of the sensory cortex in the monkey. Thus the question of whether the motor cortex receives peripheral input directly from the thalamus was still controversial at this stage.

Systematic studies to solve the controversy were carried out by Asanuma and his collaborators [9–11, 13, 45]. Using the cat, they identified thalamic neurons projecting to the motor cortex antidromically by microstimulation of the motor cortex. By limiting the intensity of the stimulation, it was possible to ascertain that the identified neurons sent projection fibers to the motor cortex directly. Then receptive fields of the identified neurons were examined by natural stimulation. Figure 1 shows an example of the results obtained using the cat [10]. Whene the

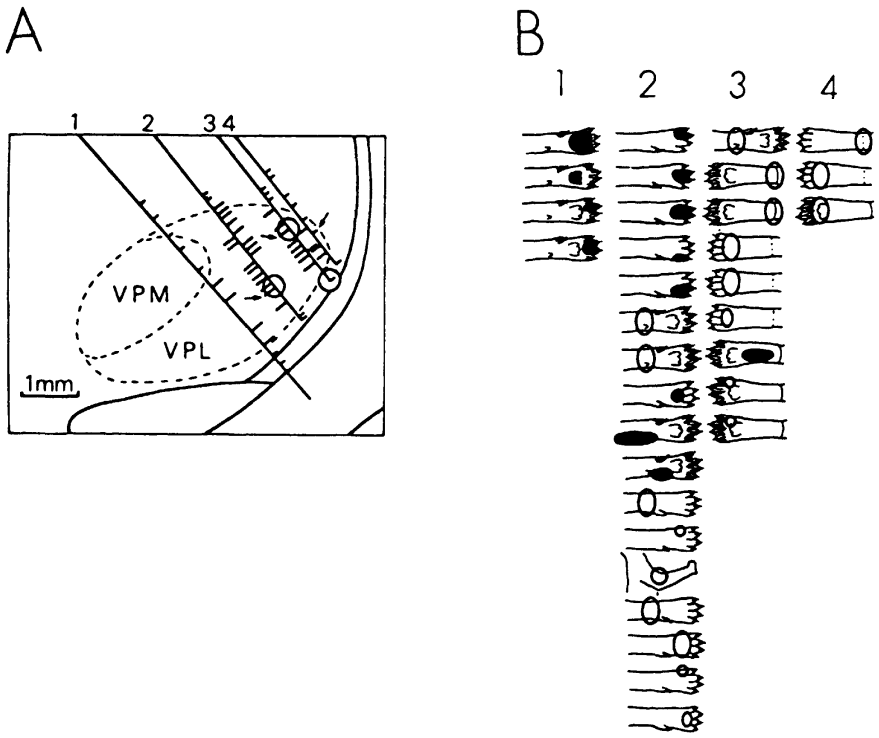

Fig. 1. Histological reconstruction of electrode tracks and distribution of cells in the thalamus. A: drawing of electrode tracks and lesions reconstructed from the histological slides. Short bars on the tracks are location of neurons which did not receive sensory input. Long right side bars show locations of neurons which received skin input. Long left side bars show locations of neurons which received input from deep receptors. Circles indicate locations of lesions. Arrows show location of neurons activated antidromically by microstimulation of the motor cortex. B: receptive fields of neurons encountered during the penetrations. Circles: pressure or passive joint movement. Blackened areas: touch to the skin. Modified from ASANUMA *et al.* [10].

electrode was in the bulk of VL, neurons encountered did not receive peripheral input. However, when the electrode was advanced to the border area between VL and VPL, neurons encountered received peripheral input arising from circumscribed areas in the periphery. Some of these neurons were also activated antidromically by stimulation of the motor cortex, demonstrating that neurons located at the border area transferred peripheral input directly to the motor cortex. At around the same time, similar results were also obtained in the monkey by three different groups [11, 36, 47]. The pathways responsible for the direct input to the motor cortex were examined by recording peripherally elicited cortical evoked

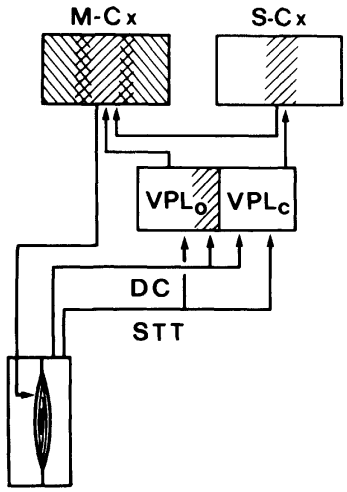

Fig. 2. Sensory input pathways to the motor cortex in the monkey. Contractions of a muscle stimulate related receptors and intitiate sensory impulses through dorsal column (DC) and spinothalamic (STT) pathways. DC sends input to both motor cortex (M-Cx) and sensory cortex (S-Cx), but STT sends input primarily to the S-Cx.

potentials and sectioning various pathways. The results demonstrated that the direct input ascends through both the spinothalamic tract and the dorsal columns in the cat [9] and primarily through the dorsal columns in the monkey [13] (Fig. 2). The results were in accord with the report that section of the dorsal column abolished sensory input to the motor cortex [20]. The results altogether provided strong evidence that the motor cortex receives peripheral input directly from the thalamus, but soon controversies arose.

Shortly after the above reports, TRACEY *et al.* [78] examined the sensory input pathway using the monkey. They reported that injection of HRP to VPLo, which corresponds to VL in the cat, did not retrogradely label the cells in the dorsal column nuclei nor did injection of tritiated amino acid into the dorsal column nuclei lead to autoradiographic labeling of terminals in the VPLo. They concluded that the origin of short latency sensory input to VPLo, hence to the motor cortex, is unclear. The crucial question for this kind of experiments is the identification of the border area between VPLo and VPLc. At the time when VPL was subdivided by OLSZEWSKI [59], knowledge of the anatomy and physiology of this area was still in the formative stage. This area is composed of evenly and sparsely distributed large multipolar cells. In addition, there are many smaller cells. Olszewski subvidided this area into VPLo and VPLc based on the density of the smaller cells. In some monkeys, the population of smaller cells changes abruptly at the border area between the VPLo and VPLc, but in many cases, delineation of the border line between these two areas is rather difficult. Furthermore, it was, and still is, practically impossible

to draw a line between the areas which actually project to the motor and the sensory cortices respectively. In their study, TRACEY *et al.* [78] used peripherally evoked field potentials in the VPL as the guideline to locate VPLo on the stereotaxic coordinates and then injected HRP to the same site. They also injected tritiated amino acids to an area between the cuneate and gracile nuclei and examined the labeled terminals in the thalamus in reference to thalamic cytoarchitecture. Shortly after this report, BERKLEY [17] investigated the same problem in a different way. Instead of depending entirely on cytoarchitecture, she used a double orthograde labeling technique to compare the projections to the thalamus from the deep cerebellar nuclei, dorsal column nuclei, and spinothalamic tract using the cat and the monkey. The basic idea was that the thalamic area which receives input from the deep cerebellar nuclei projects to the motor cortex. She found that the border area between VPL and VL in the cat and the caudal parts of VPLo in the monkey received converging input from the deep cerebellar nuclei, the dorsal column nuclei, and the spinothalamic tract. CRAIG and BURTON [25] injected HRP into the cervical and/or lumbar enlargement of the spinal cord in cats and raccoons and examined distribution of fibers containing anterogradely transported HRP. They found that the labeled fibers distributed widely in the thalamus including VL. On the other hand, GREENAN and STRICK [33] injected HRP into the motor cortex and tritiated amino acids into the cervical spinal cord in the monkey. They found no overlap between spinothalamic terminals and thalamic neurons which were retrogradely labeled from the motor cortex. More recently, HIRAI and JONES [35] restudied the same problem using a double labeling method in the cat. They injected fluorogold into the motor cortex to retrogradely label the thalamic projection neurons and injected Fast Blue into the dorsal column nuclei or the spinal cord to anterogradely label the terminals. They found no overlap of the projection neurons and lemniscal terminals, but found overlap of spinothalamic terminals and the projection neurons. Thus, the results of anatomical studies about the sensory input pathways to the thalamic area which projects to the motor cortex are still controversial, in particular with respect to the dorsal column input to VL or VPLo.

Physiological experiments revealed different results. Using the cat, TAMAI *et al.* [75] identified thalamic neurons projecting to the motor cortex by intracortical microstimulation (ICMS) of the motor cortex using a coarse pipette electrode filled with HRP solution. Whenever antidromic spikes were recorded in response to the ICMS, natural stimulation was delivered to the periphery to examine whether the cell received peripheral input. When the cell responded to both stimulations, a small amount of HRP was injected iontophoretically to the same site; 2–3 days later, retrogradely labeled cells were examined in the cuneate nucleus. They found that in all injected animals, labeled cells were found in the caudal cuneate nucleus. In the succeeding study, WATERS *et al.* [81] repeated the experiments using a more sensitive physiological method to eliminate the ambiguity resulting from spread of HRP around the injection site in the thalamus. The initial procedure was the same as in the previous experiments [75]. After identifying the thalamic neuron which re-

sponded to both stimulations, a second electrode was inserted into the caudal cuneate nucleus while microstimulation was delivered from the first electrode. When the microstimulation through the first electrode elicited antidromic spikes in the cuneate nucleus, the first electrode was used for recording and the second electrode was used for stimulation to elicit orthodromic activation of the projection neurons in the thalamus. When an orthodromically activated neuron was recorded by the first electrode, this spike was collided by antidromic spike elicited by ICMS of the motor cortex to ascertain that the orghodromically activated neuron projected to the motor cortex. Altogether 6 neurons in the VL-VPL border area responded to both ICMS and cuneate stimulations. The results conclusively demonstrated that some border area neurons transfer lemniscal input to the motor cortex in the cat. Thus the physiological results altogether clearly demonstrated that the motor cortex receives peripheral input independently of the sensory cortex both in cats and monkeys and this sensory input ascends through the lemniscal pathway to the motor thalamus.

More recently, MACKEL and NODA [50, 51] used, for the first time, intracellular recording techniques to shed new light on the controversy of whether thalamocortical relay neurons in the cerebello-cerebral circuit receive spinal input or not. The relay neurons were identified by their monosynaptic input from the contralateral deep cerebellar nuclei and many of these neurons were additionally identified as thalamocortical projection neurons in response by antidromic stimulation of the motor cortex. Intracellularly recorded postsynaptic potentials were studied in these neurons in response to stimulation of the dorsal column and in resonse to activation of spinothalamic afferents. It was found that more than 70% of VL neurons responded to dorsal column and/or spinothalamic stimulation with short- and long-latency excitatory or inhibitory postsynaptic synaptic potentials. The results indicate that a considerable amount of somatosensory integration occurs in the motor thalamus.

In view of earlier anatomical work (see above), the data of MACKEL and NODA [50] were less surprising in respect to stimulation of spinothalamic afferents than in respect to stimulation of dorsal column afferents. Since there is no anatomical evidence for a projection from the dorsal column nuclei to the bulk of VL, it suggested that the postsynaptic responses were relayed via a structure(s) intercalated between the dorsal column nuclei and VL. There are, however, anatomical data, which demonstrated that the dorsal columns project to the pretectum [18, 83] and the pretectum to VL [3, 38]. Taking advantage of these reports, it became possible to investigate the effects of pretectal lesions on postsynaptic potentials recorded in VL neurons in response to stimulation of dorsal column afferents [51]. Following pretectal lesions, they found that all short latency input from the dorsal columns to VL was abolished while only longer latency input remained. The data suggest that the pretectum is indeed intercalated between the dorsal columns and VL and forwards spinal information to VL relay neurons. The findings that VL neurons receive a substantial amount of excitation and inhibition from spinal

afferents implies that the cerebellar commands can be modified before they reach the motor cortex. It also implies that the motor cortex receives more sensory information from the thalamus than is generally believed to be the case.

II. FUNCTION OF SENSORY INPUT TO THE MOTOR CORTEX

The importance of the sensory input for movement has been known for a long time. More than a hundred years ago, Claude BERNARD [19] reported that section of the dorsal roots impaired movements in the frog and the putty. MOTT and SHERRINGTON [54] repeated the experiment with the monkey and reported that dorsal rhizotomy practically abolished movements of the hand and foot, although movements of proximal joints were less impaired. Later study demonstrated that by careful training, the deafferented monkey could learn to use the affected arm and leg although the movements were abrupt and exaggerated and were different from normal animals [42]. Furthermore, it has been shown recently that after dorsal rhizotomy, the monkey still could manipulate a handle and bring it to a target area [63]. It should be noted, however, that to be able to move the hand to a gross target is different from being able to use the hand skillfully. A recent study on a deafferented patient [68] showed that the subject could learn to move the hand accurately as instructed, but in daily life, the hands were useless. The patient was unable to fasten his shirt button or to hold a water cup in one hand. However, since section of the dorsal roots obstructs the sensory input not only to the higher central nervous system but also to the spinal cord, it is difficult to fully understand the genesis of the deficits.

As already described in the preceding section, the functional role of the sensory input to the motor cortex was though to be minute until recently. Discovery of direct input from the thalamus, however, made it clear that not only sensory cortex ablation, but also dorsal column section are necessary to remove the sensory input from the motor cortex. Section of the dorsal column has been studied repeatedly. MOUNTCASTLE [56] reviewed the effect of the section in various animals including humans. He concluded that dorsal column section results in profound alterations in somatic sensitivity of the ipsilateral side of the body. WALL [80] reviewed the effects not only on sensory, but also on motor functions. From various controversial reports, he concluded that the dorsal column is related not only to the sensory, but also to the motor functions. These are failure to handle objects in extrapersonal space, and immobile posture, especially in the absence of vision. Although interpretation of the results of dorsal column section is still controversial, one common observation is that the section by itself does not produce clear motor deficits which can be recognized easily. However, when the section was combined with sensory cortex ablation, the monkey was totally incapable of purposeful movements [6]. As shown in Fig. 3, the monkey tried to pick up a peanut from the hand in front, but in many cases, he could not reach the target. When he could pick it up by chance, he tended to drop it when he tried to eat it. Occasional success

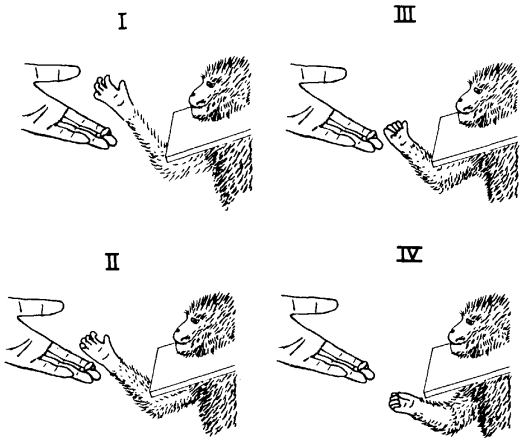

Fig. 3. Motor deficit produced by combined lesions of the sensory cortex and the dorsal column. The monkey tried to pick up a peanut from the experimenter's hand, but could not make appropriate movements. The drawings were made from movie frames. From ASANUMA and ARISSIAN [6].

encouraged him to keep trying the task. Thus the combined ablation produced loss of orientation and coordination which lasted during 2 months observation. The results clearly demonstrated that sensory input to the motor cortex is indispensable for execution of skilled movements. A natural question is how does the input participate in execution of movements in normal animals. The dominant theory that the "transcortical loop functions by correcting error when intended movement encountered unexpected obstable [61]" does not explain the above observation, because in that monkey, the hand did not encounter an obstacle, but could not reach the target. On the other hand, it has been proposed that the loop circuits circulate impulses between the cortical efferent zone and the periphery to set up excitability level of the cortical efferent zones [5]. Later, FAVOROV *et al.* [28] developed this proposal further and called this the "preferential bias theory (1988)."

III. PREFERENTIAL BIAS THEORY

If we think of skilled voluntary movements, the start may look abrupt, but in many cases, it is not. For example, when a cat tries to catch a prey, it waits patiently until the prey approaches within the reach of the jump. During that time, it is known that the so-called "readiness potential" appears from wide areas of the cortex [26] including the motor area [58] before start of the movement. This suggests that cortical neurons including those in the motor cortex start their activity long before the actual movement. Although we do not know the genesis of this potential, it is highly likely that during the premovement period, various loop circuits within the higher brain increase the traffic of nerve impulses resulting in the generation of

such cortical potential. Concerning the traffic of nerve impulses, the motor cortex is known to have loop circuits with the sensory cortex, the premotor area, the association cortex, subcortical nuclei, the cerebellum, various sensory relay nuclei, the spinal cord and the periphery. Among these, the loop circuit with the periphery seems particularly important because interruption of this circuit jeopardized cortical motor function [6]. A question then is how does this circuit participate in execution of skilled movements?

As we cited previously, the cat does not move while waiting for the approach of the prey, but this does not mean that the tone of the muscle stays the same. On the contrary, it is likely that the tone of the would-be activated muscles is increased in preparation for the coming jump and start circulating impulses between the motor cortex and the periphery. This would increase the excitability of the would-be activated cortical efferent zones and at the same time, inhibit the neighboring zones by surround inhibition. In this way, the cat can increase the excitability of selected muscles necessary for the expected movement more accurately and when a command signal arrives, can pursue the movement more efficiently. The question whether this is in fact the case was examined by FAVOROV *et al.* [28] using the moneky. They trained the monkey to sit in a chair and to pick up a food pellet from a hole on a rotating foodboard. The food was delivered to the hole through a slot located at the opposite side of the monkey with a click noise so that the monkey was aware when it was delivered. The monkey was trained not to move the hand until the food approached to within the reach of the hand. This was a situation similar to that of a cat waiting for a prey. Figure 4 shows neuronal activities during this pick up task. Left top shows the electrode track into the motor cortex and the sites where neurons related to the pick up task were recorded. Pictures in the left half of the figure show receptive fields of these neurons examined by natural peripheral stimulation and the movements produced by microstimulation at the same site. The histograms in the right half of the figure show activities of 7 neurons during the pick up tasks. As shown, most neurons increased their discharges in relation to the start of the pick up tasks, but neuron no. 7 increased the firing rate immediately after delivery of the food during clockwise rotation. They found that about 10% of cortical neurons which were related to the pick up task showed this kind of early discharges and almost all of these increases appeared in one direction of the rotation. Some of these early discharges were accompanied by slight increase of EMG activities in the target muscle although the animal did not move the hand. This specificity in increase of discharge rate may be resolved by the following consideration. Since the movement of fingers to pick up a food pellet from a hole moving in one direction is different from the movement for pick up of a food pellet approaching from another direction, this increase of muscle tone seems to be specific for a specific movement. Section of the dorsal columns abolished these early discharges and also resulted in retardation of motor skills. These results clearly demonstrated that there was an increase of circulation of nerve impulses between the motor cortex and the periphery before the start of actual movements. These

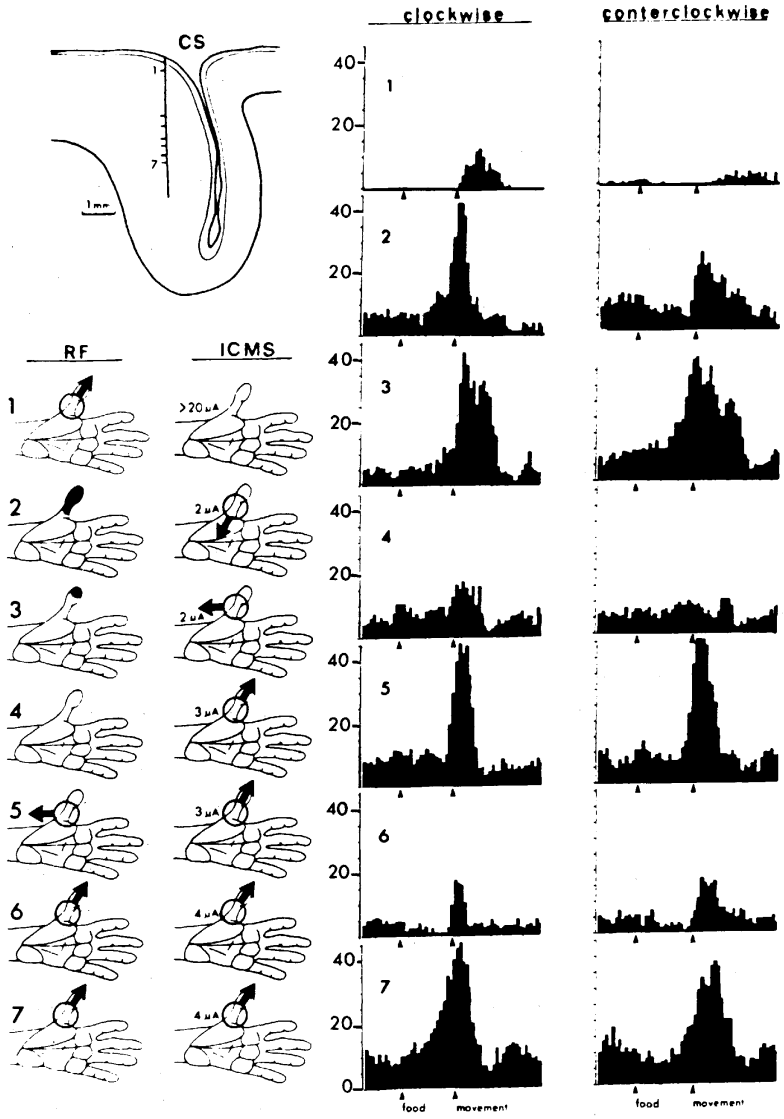

Fig. 4. Examples of cells discharging during the food pick up tasks. Left top: electrode track and the sites where the cells were recorded. CS: central sulcus. First-column pictures: peripheral areas (RF, receptive fields) whcih sent afferent impulses to these 7 neurons. Blackened areas: touch. Circles: joint movements. Second-column pictures: motor effects produced by microstimulation (ICMS) of the recorded sites. Numbers: threshold currents. Histograms (right): discharges of respective neurons before the delivery of the food until after the start of the hand, movements. Arrowheads: delivery of the food and start of the hand movement. From FAVOROV *et al.* [28].

results supported their interpretation that the sensory input changes excitability of cortical efferent zones by increased circulation of impulses between the cortex and the periphery and they proposed this mechanism as one of the bases of skilled voluntary movements and called it as the "preferential bias theory." So far, this is the latest theory about the function of the sensory input to the motor cortex. If this theory is correct, it predicts that increase of impulse circulation in a particular loop facilitates contraction of that particular muscle. It should be noted that it is our daily laboratory experience that motor cortical neurons discharge continuously even when the animal is at rest. Gentle natural stimulation of the receptive field of these neurons, including PT cells, produces vigorous discharges of these neurons, but the animal stays still. Besides, FETZ and FINOCCHIO [30] have shown that these resting discharges can be reinforced by operant conditioning without EMG activities. These results might suggest that discharges of motor cortical neurons including PT cells are not necessarily correlated to movements. The new theory may fit well to these observations.

IV. INDIRECT INPUT TO THE MOTOR CORTEX

The motor cortex receives input not only from the thalamus, but also from various areas of the cortex. These are the sensory, premotor, supplementary and association cortices. It also receives commissural input from the contralateral motor cortex, except for distal limb areas. These projections were studied mostly anatomically but their functions are still virtually unknown. Recently however, some progress has been made in the study of sensory to motor cortex projection and these will be discussed here. It is known that area 2 of the sensory cortex projects to the motor cortex in both cats [39] and monkeys [41]. It has been shown that cooling [76] or removal [11] of the sensory cortex including area 2 does not alter characteristics of sensory input to motor cortical neurons, hence the main function of the projection does not seem to be the transfer of the sensory information to the motor cortex. Although removal of the sensory cortex by itself produces very little motor deficits, removal or section of the projection fibers [6] after dorsal column section paralyzes the animal. Furthermore, when the sensory cortex was removed after recovery of motor function following cerebellar lesion, the recovered function was decompensated [49]. These observations suggest that this system is involved in some motor functions. Anatomy of this projection system will be reviewed first. EM studies have shown that the projection fibers terminate diffused in all cortical layers, but most heavily in the superficial layers (II and III) [37, 73]. Recent histochemical study [64] revealed that the projection is not diffuse, but specific. Injection of a small amount of PHA-L into the sensory cortex labeled terminal fibers which formed a few column-like arrays in the motor cortex, the diameter of which corresponded to that of motor columns.

Concerning the function of this projection, SAKAMOTO *et al.* [69] found that tetanic stimulation of area 2 produced long-term potentiation (LTP) of synaptic

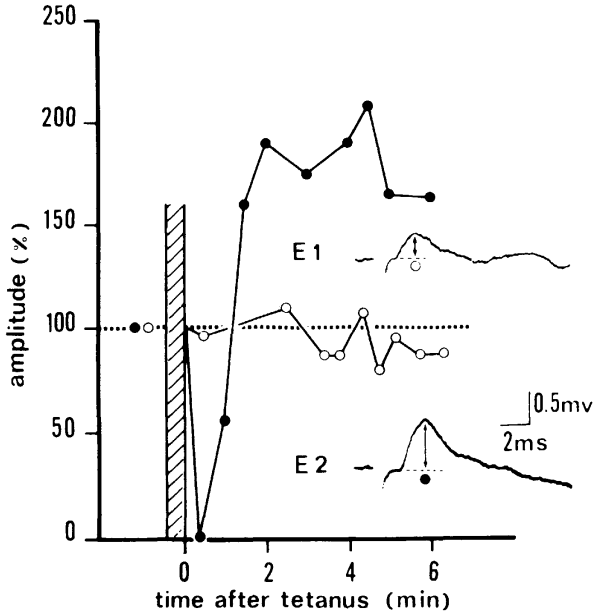

Fig. 5. Effect of tetanic stimulation on EPSPs of the same cell elicited from different sites. Inset shows stimulating and recording setups. Stimulation through E1 and E2 produced short latency (monosynaptic) EPSPs in a motor cortical neuron. Tetanic stimulation through E2 produced LTP in the following EPSPs, but not in EPSPs elicited by stimulation of E1. Modified from SAKAMOTO *et al.* [69].

transmission in motor cortical neurons. It has been shown that ICMS of area 2 produces monosynaptic EPSPs in neurons in the superficial layers of the motor cortex [44]. Sakamoto *et al.* first recorded monosynaptic EPSPs in the motor cortex and then delivered tetanic ICMS (200 Hz, 20 s) to the same site and examined amplitude of EPSPs elicited by the following ICMS (1 Hz). They found a marked increase in the amplitude of EPSPs after the tetanic stimulation which lasted as long as the electrode stayed stably inside the cell, the maximum being 25 min. This LTP seems specific to a specific input. Occasionally they were able to elicit monosynaptic EPSPs in one cell from 2 sensory cortical sites. As shown in Fig. 5, tetanic ICMS to one site produced LTP in homonymous input, but not in heteronymous input. Since it is generally agreed that LTP is one of the bases of learning and memory, this observation raised a possibility that association input from area 2 to area 4 is related to motor learning and memory. To examine whether this was the case, SAKAMOTO *et al.* [70] subsequentely performed the following experiments. Cats in which area 2 of one hemisphere was removed were trained to acquire a new motor skill using either forelimb alternately. The task was to pick up a food pellet (cat biscuit) from a beaker placed at a short distance (5 cm) from the cage, by extending one of the forelimbs. Since the biscuit was too hard to be pierced with claws, the biscuit fell

down into the space in between when the cat raked the beaker to pick up the food. Therefore, the cat had to develop a new skill of combined supination and flexion of the wrist to bring the food back to the cage. A normal cat could learn this task within 2–3 weeks. When the sensory cortex was hemi-decorticated, the control limb could acquire the skill within the same period of time (2–3 weeks), but the experimental limb needed much longer time (4–6 weeks). Then the remaining sensory cortex was removed. There was a transient motor deficit following the operation, but the learned motor skill returned to the preoperative level within 2–3 days. The results can be interpreted in various ways, but since the projection from the sensory cortex to the motor cortex can produce LTP, it is likely that this projection participated in the learning of the motor skills.

V. CLOSING REMARKS

One of the major progresses in the study of the motor cortex during the past decade was the discovery that the sensory input to the motor cortex plays an important role in the execution of voluntary movements. Concerning the mechanisms subserving the execution of voluntary movements, we have proposed [28] that circulation of impulses between the efferent zones and the periphery plays an important role by increasing excitability of the cortical efferent zones and facilitates contraction of related muscles. This theory is based on the assumpiton that cortical efferent zones constitute the basis of cortical motor function. While it is firmly established that there are cortical efferent zones and that there are closed loop circuits between the cortex and the periphery [4, 34], there are still some unsolved problems concerning this circuit. The cortical efferent zone is defined by the observation that threshold ICMS in this area produces contraction of a particular muscle [7] and contraction of the target muscle excites receptors related to the contraction which then send afferent impulses back to the original efferent zone [67]. However, it was later shown that each pyramidal tract cell in the efferent zone branches extensively in the spinal cord and innervates wide areas of the spinal cord [31, 71, 72]. Although it was found, later, that pyramidal fibers arising from a small area of the cortex have a common target [12, 23], a question still remains as to the function of the sensory input to those neurons having such a wide branching in the spinal cord. To answer this question, the functional significance of these neurons having extensive branching has to be ascertained first. If all of these branching are physiologically active, then stimulation of the motor cortex, no matter how it is done, should not produce contraction of an isolated muscle. On the contrary, with ICMS, it is easy to produce contraction of single muscles. Then, what are these branches doing while a muscle or a selected group of muscles contracts? It may be argued that these branches facilitate contraction of other muscles which are necessary to keep an appropriate posture while pursuing a particular movement. However, if we think of many cortically induced fine movements, such as dissecting a cell under a microscope or passing a thread through a needle hole, adjustment of

the posture is not necessary. Since there are no reasonable experiments which suggest function of these branches, old behavioral studies will be reviewed.

The effect of pyramidal section was first studied by TOWER [77], but later, this was restudied more carefully by LAWRENCE and KUYPERS [46]. They sectioned the pyramidal tract in 39 monkeys; in 8 of these, the lesion was limited to the pyramidal tract. These animals could sit, stand, walk, run, and climb immediately after the operation. They soon regained the independent use of their extremities, but the capacity for manipulation of individual fingers never returned. Stimulation experiment [14] revealed that after pyramidal section, ICMS could not produce contraction of individual muscles. Obviously the function of the pyramidal tract is not the regulation of the posture, but manipulation of individual muscles. Therefore, we still do not know about the function of these branches. This may be compared to the study of the spinal cord in the early stage. We now know that there are many afferent fibers from a muscle which send impulses not only to the spinal cord, but also to the higher centers, the function of which is yet to be fully understood. However, modern study of the spinal cord was started by simply classifying afferent fibers into groups Ia, Ib, and II [48], ignoring all other complications. Needless to say, this classification simplified the study of the spinal cord and greatly contributed to the subsequent study of the central nervous system. By the same token, for the study of a sophisticated system such as the motor cortex which controls complicated movements, some simplification might also be necessary until more systematic knowledge is accumulated, and so was done by the reviewer in his research.

Key words: motor cortex, sensory cortex, direct and indirect sensory input, intracranial microstimulation, voluntary movement.

REFERENCES

1. ADRIAN, E. D. and MORUZZI, G. (1939) Impulses in the pyramidal tract. *J. Physiol. (Lond.)*, **97**: 153–199.
2. ALBE-FESSARD, D. and LIEBESKIND, J. (1966) Origine des messages somato-sensitifs activant les cellules du cortex moteur chez le singe. *Exp. Brain Res.*, **1**: 127–146.
3. ANDERSON, M. E. and DEVITO, J. L. (1987) An analysis of potentially converging inputs to the rostral ventral thalamic nuclei of the cat. *Brain Res.*, **68**: 260–276.
4. ASANUMA, H. (1981a) The pyramidal tract. *In*: Handbook of Physiology, Section 1: The Nervous System, Vol. 11, Motor Control, ed. by BROOKS, V. B., Am. Physiol. Soc., Bethesda, pp. 703–733.
5. ASANUMA. H. (1981b) Functional role of sensory input to the motor cortex. *Prog. Neurobiol.*, **16**: 241–262.
6. ASANUMA, H. and ARISSIAN, K. (1984) Experiments on functional role of peripheral input to motor cortex during voluntary movements in the monkey. *J. Neurophysiol.*, **52**: 212–227.
7. ASANUMA, H. and ROSÉN, I. (1972) Topographical organization of cortical efferent

zones projecting to distal forelimb muscles in the monkey. *Exp. Brain Res.*, **14**: 243–256.

8. ASANUMA, H., STONEY, S. D., Jr, and ABZUG, C. (1968) Relationship between afferent input and motor outflow in cat motorsensory cortex. *J. Neurophysiol.*, **31**: 670–681.
9. ASANUMA, H., LARSEN, K. D., and ZARZECKI, P. (1979a) Peripheral input pathways projecting to the motor cortex in the cat. *Brain Res.*, **172**: 197–208.
10. ASANUMA, H., LARSEN, K. D., and YUMIYA, H. (1979b) Receptive fields of thalamic neurons projecting to the motor cortex in the cat. *Brain Res.*, **172**: 217–228.
11. ASANUMA, H., LARSEN, K. D., and YUMIYA, H. (1979c) Direct sensory pathway to the motor cortex: A basis of cortical reflexes. *In*: Integration in the nervous system, ed. by ASANUMA, H. and WILSON V. J., Igaku-shoin, Tokyo, New York, pp. 223–238.
12. ASANUMA, H., ZARZECKI, P., JANKOWSKA, E., HONGO, T., and MARCUS, S. (1979d) Projection of individual pyramidal tract neurons to lumbar motor nuclei of the monkey. *Exp. Brain Res.*, **34**: 73–89.
13. ASANUMA, H., LARSEN, K. D., and YUMIYA, H. (1980) Peripheral input pathways to the monkey motor cortex. *Exp. Brain Res.*, **38**: 349–355.
14. ASANUMA, H., BABB, R. S., MORI, A., and WATERS, R. S. (1981) Input-output relationships in cat's motor cortex after pyramidal section. *J. Neurophysiol.*, **46**: 694–703.
15. BARD, P. (1933) Studies on the cerebral cortex. *Arch. Neurol. Psychiatr.*, **30**: 40–74.
16. BARD, P. (1938) Studies on the cortical representation of somatic sensibility. *Bull. N. Y. Acad. Med.*, **14**: 585–607.
17. BERKLEY, K. J. (1983) Spatial relationships between the terminations of somatic sensory and motor pathways in the rostral brainstem of cats and monkeys. II. Cerebellar projections compared with those of ascending somatic sensory Pathways in lateral diencephalon. *J. Comp. Neurol.*, **220**: 229–251.
18. BERKLEY, K. J. and MASH, D. C. (1978) Somatic sensory projections to the pretectum in the cat. *Brain Res.*, **158**: 445–449.
19. BERNARD, C. (1858) Leons sur la Physiologie et al Pathologie de Systeme Nerveux, Bailliere, Paris, pp. 246–266.
20. BRINKMAN, J., BUSH, B.M., and PORTER, R. (1978) Deficient influences of peripheral stimuli on precentral neurons in monkeys with drorsal column leisons. 48 **276**: 27–48.
21. BROOKS, V. B., RUDOMIN, P., and SLAYMAN, C. L. (1961) Peripheral receptive fields of neurons in the cat's cerebral cortex. *J. Neurophysiol.*, **24**: 302–325.
22. BUSER, P. and IMBERT, M. (1961) Sensory projections to the motor cortex in cats. *In*: Sensory Communication, ed. by ROSENBLITH, W. A., Wiley, New York, pp. 607–626.
23. CHENEY, P. D. and FETZ, E. E. (1985) Comparable patterns of muscle facilitation evoked by individual cortico-motoneuronal (CM) cells and by single intracortical microstimuli in primates: Evidence for functional groups of CM cells. *J. Neurophysiol.*, **53**: 786–804.
24. CLOUGH, J. F. M., PHILLIPS, C. G., and SHERIDAN, J. D. (1971) The short latency projection from the baboon's motor cortex to fusimotor neurons of the forearm and hand. *J. Physiol. (Lond.)*, **216**: 257–279.
25. CRAIG, A. D. and BURTON, H. (1985) The distribution and topographical organization of the thalamus of anterogradely-transported horseradish peroxidase after spinal injections in the cat and raccoon. *Exp. Brain Res.*, **58**: 227–254.
26. DEECKE, L., SCHEID, P., and KORNHUBER, H. H. (1969) Distribution of readiness potential premotion positivity, and motor potential of the human cerebral cortex

preceding voluntary finger movements. *Exp. Brain Res.*, **7**: 158–168.

27. DENNY-BROWN, D. (1966) The Cerebral Control of Movement, Thomas, Springfield, Il.
28. FAVOROV, O., SAKAMOTO, T., and ASANUMA, H. (1988) Functional role of cortico-peripheral loop circuits during voluntary movements in the monkey; A preferential bias theory. *J. Neurosci.*, **8**: 3266–3277.
29. FETZ, E. E. and BAKER, M. A. (1969) Response properties of precentral neurons in awake monkeys. *Physiologist*, **12**: 223.
30. FETZ, E. E. and FINOCCHIO, D. V. (1975) Correlations between activity of motor cortex cells and arm muscles during operantly response patterns. *Exp. Brain Res.*, **23**: 217–240.
31. FETZ, E. E., CHENEY, P. D., and GERMAN, D. C. (1976) Corticomotoneuronal connections of precentral cells detected by post-spike averaging of EMG activity in behaving monkeys. *Brain Res.*, **114**: 505–510.
32. FRITSCH, G. and HITZIG, E. (1870) Ueber die elektrische Erregbarkeit des Grosshirns. *Arch. Anat. Physiol. Wiss. Med.*, **37**: 300–332.
33. GREENAN, T. J. and STRICK, P. L. (1986) Do thalamic regions which project to primate motor cortex receive spinothalamic input ? *Brain Res.*, **326**: 384–388.
34. Henneman, E. (1980) Motor function of the cerebral cortex. *In*: Medical Physiology, ed. by MOUNTCASTLE, V. B., Mosby, St. Louis, pp. 859–889.
35. HIRAI, T. and JONES, E. G. (1988) Segregation of lemniscal inputs and motor cortical outputs in cat ventral thalamic nuclei: Application of novel technique. *Exp. Brain Res.*, **71**: 329–344.
36. HORN, M. K. and TRACEY, D. J. (1979) The afferents and projections of the ventro-posterolateral thalamus in the monkey. *Exp. Brain Res.*, **36**: 129–141.
37. ICHIKAWA, M., ARISSIAN, K., and ASANUMA, H. (1985) Distribution of corticocortical and thalamocortical synapses on identified motor cortical neurons in the cat: Golgi, electron microscopic and degeneration study. *Brain Res.*, **345**: 87–101.
38. ITOH, K. (1977) Efferent projections of the pretectum in the cat. *Exp. Brain Res.*, **30**: 89–105.
39. JONES, E. G. and POWELL, T. P. S. (1968a) The ipsilateral cortical connections of the somatic sensory area in the cat. *Brain Res.*, **9**: 71–94.
40. JONES, E. G. and POWELL, T. P. S. (1968b) The commisural connections of the somatic sensory cortex in the cat. *J. Anat.*, **103**: 433–455.
41. JONES, E. G., COULTER, J. D., and HENDRY, S. H. (1978) Intracortical connectivity of architechtonic fields in the somatic sensory, motor and parietal cortex of monkeys. *J. Comp. Neurol.*, **181**: 291–348.
42. KNAPP, H. E., TAUB, E., and BERMAN, A. L. (1963) Movements in monkeys with deafferented forelimbs. *Exp. Neurol.*, **7**: 305–315.
43. KOEZE, T. H., PHILLIPS, C. G., and SHERIDAN, J. D. (1968) Threshold of cortical activation of muscle spindles and motoneurons of the baboon's hand. *J. Physiol. (Lond.)*, **195**: 419–449.
44. KOSAR, E., WATERS, R. S., TSUKAHARA, N., and ASANUMA, H. (1985) Anatomical and physiological properties of the projection from the sensorty cortex to the motor cortex in normal cats: The difference between corticocortical and thalamocortical projections. *Brain Res.*, **345**: 68–78.
45. LARSEN, K. D. and ASANUMA, H. (1979) Thalamic projections to the feline motor cortex studied with horseradish peroxidase. *Brain Res.*, **172**: 209–215.

46. LAWRENCE, D. G. and KUYPERS, H. G. J. M. (1968) The functional organization of the motor system in the monkey. I. The effects of bilateral pyramidal lessions. *Brain*, **91**: 1–14.
47. LEMON, R. N. and Van der BURG, J. (1979) Short-latency peripheral inputs to thalamic neurons projecting to the motor cortex in the monkey. *Exp. Brain*, **36**: 445–462.
48. LLOYD, D. P. C. (1943) Neuron patterns controlling transimission of ipsilateral hind limb reflexes in cat. *J. Neurophysiol.*, **6**: 293–315.
49. MACKEL, R. (1987) The role of the monkey sensory cortex in the recovery from cerebellar injery. *Exp. Brain Res.*, **66**: 638–652.
50. MACKEL, R. and NODA, T. (1988) Sensory input to cerebello-cerebral relay neurons in the cat thalamus. *Brain Res.*, **440**: 348–351.
51. MACKEL, R. and NODA, T. (1989) The pretectum as a site for relaying dorsal column input to thalamic VL neurons. *Brain Res.*, **476**: 135–139.
52. MALIS, L. I., PRIBRAM, K. H., and KRUGER, L. (1953) Action potentials in "motor" cortex evoked by peripheral nerve stimulation. *J. Neurophysiol.*, **16**: 161–167.
53. MARSHALL, W. H., WOOLSEY, C. N., and BARD, P. (1937) Representation of tactile sensibility in the monkey's cortex as indicated by cortical potentials. *Am. J. Physiol.*, **119**: 372–373.
54. MOTT, F. W. and SHERRINGTON, C. S. (1895) Experiments upon the influence of sensory nerves upon movement and nutrition of the limb. *Proc. R. Soc. Lond.*, **57**; 481–488.
55. MOUNTCASTLE, V. B. (1957) Modality and topographic properties of single neurons of cat's somatic sensory cortex. *J. Neurophysiol.*, **20**: 408–436.
56. MOUNTCASTLE, V. B. (1980) Neuronal mechanisms in somesthesis. *In*: Medical Physiology, ed. by MOUNTCASTLE, V. B., Mosby, St. Louis, pp. 348–390.
57. MURPHY, J. T., KWAN, H. C., MACKAY, W. A., and WONG, Y. C. (1978) Spatial organization of precentral cortex in awake primates. III. Input-output coupling. *J. Neurophysiol.*, **41**: 1132–1139.
58. NESHIGE, R., LUDERS, H., and SHIBATANI, H. (1988) Recording of movement-related potentials from scalp and cortex in man. *Brain*, **111**: 719–736.
59. OLSZEWSKI, J. (1952) The thalamus of the Macaca mulatta. Kager, Basel.
60. OSCARSSON, O. and ROSEN, I. (1963) Projection of cerebral cortex of large muscle-spindle afferents in forelimb nerves of the cat. *J. Physiol. (Lond.)*, **169**: 924–945.
61. PHILLIPS, C. G. (1969) Motor apparatus of the baboon's hand. *Proc. R. Soc. Lond.* (Ser. B), **173**: 141–174.
62. PHILLIPS, C. G., POWELL, T. P. S., and WIESENDANGER, M. (1971) Projection from low-threshold muscle afferents of hand and forearm to area 3a of baboon's cortex. *J. Physiol. (Lond.)*, **214**: 419–446.
63. POLIT, A. and BIZZI, E. (1979) Characteristics of motor programs underlying arm movements in monkeys. *J. Neurophysiol.*, **42**: 183–194.
64. PORTER, L. L. and SAKAMOTO, K. (1988) The organization and synaptic relationship of the projection from the primary sensory to the primary motor cortex in the cat. *J. Comp. Neurol.*, **271**: 387–396.
65. POWELL, T. P. S. and MOUNTCASTLE, V. B. (1959) Some aspects of the functional organization of the cortex of the postcentral gyrus of the monkey: A correlation of findings obtained in a single-unit analysis with cytoarchitecture. *Johns Hopkins Hosp. Bull.*, **105**: 133–162.

66. RADEMAKER, G. G. J. (1931) Das Stehen, Springer, Berlin.
67. ROSÉN, I. and ASANUMA, H. (1972) Peripheral afferent inputs to the forelimb area of the monkey motor cortex: Input-output relations. *Exp. Brain Res.*, **14**: 257–273.
68. ROTHWELL, J. C., TAUB, M. M., DAY, B. L., OBESO, J. A., THOMAS, P. K., and MARSDEN, C. D. (1982) Manual motor performance in a deafferented man. *Brain*, **105**: 515–542.
69. SAKAMOTO, T., PORTER, L. L., and ASANUMA, H. (1987a) Long-lasting potentiation of synaptic potentials in the motor cortex produced by stimulation of the sensory cortex in the cat: A basis of motor learning. *Brain Res.*, **413**: 360–364.
70. SAKAMOTO, T., ARISSIAN, K., and ASANUMA, H. (1987b) Functional role of the sensory cortex in learning of food taking movement in cats. *Abstr. Soc. Neurosci.*, **13**: 188.2.
71. SHINODA, Y., ARNOLD, A. P., and ASANUMA, H. (1976) Spinal branching of corticospinal axons in the cat. *Exp. Brain Res.*, **26**: 215–234.
72. SHINODA, Y., ZARZECKI, P., and ASANUMA, H. (1979) Spinal branching of pyramidal tract neurons in the monkey. *Exp. Brain Res.*, **34**: 59–72.
73. SLOPER, J. J. and POWELL, T. P. S. (1979) An experimental electron microscopic study of afferent connections to the primate motor and somatic sensory cortices. *Philos. Trans. R. Soc. Lond.* B, **285**: 199–226.
74. STRICK, P. L. (1976) Activity of ventrolateral thalamic neurons during arm movement. *J. Neurophysiol.*, **39**: 1031–1044.
75. TAMAI, Y., WATERS, R. S., and ASANUMA, H. (1984) Caudal cuneate nucleus projection to the direct thalamic relay to the motor cortex in cat: An electrophysiological and anatomical study. *Brain Res.*, **323**: 360–364.
76. THOMPSON, W. D., STONEY, S. D., Jr, and ASANUMA, H. (1970) Characteristics of projections from primary sensory cortex to motor-sensory cortex in cats. *Brain Res.*, **22**: 15–27.
77. TOWER, S. S. (1940) Pyramidal lesion in the monkey. *Brain*, **63**: 36–90.
78. TRACEY, D. J., ASANUMA, C., JONES, E. G., and PORTER, R. (1980) Thalamic relay to motor cortex: Afferent pathways from brain stem, cerebellum, and spinal cord in monkeys. *J. Neurophysiol*, **44**: 532–554.
79. TRAVIS, A. M. and WOOLSEY, C. N. (1956) Motor performance of monkeys after bilateral partial and total cerebral decortications. *Am. J. Phys. Med.*, **35**: 273–289.
80. WALL, P. D. (1970) The sensory and motor role of impulses travelling in the dorsal columns towards cerebral cortex. *Brain*, **93**: 505–524.
81. WATERS, R. S., TAMAI, Y., and ASANUMA, H. (1985) Caudal cuneate nucleus projection to the direct thalamid delay to the motor cortex: An electrophysiological study. *Brain Res.*, **360**: 361–365.
82. WELT, C., ASCHOFF, J., KAMEDA, K., and BROOKS, V. B. (1967) Intracortical organization of cat's sensory motor neurons. *In*: Symposium on Neurophysiological Basis of Normal and Abnormal Motor Activities, ed. by PURPURA, D. P. and YAHR, M. D., Raven, Hewlett, NY, pp. 255–293.
83. WIBERG, M. and BLOMQVIST, A. (1984) The projection to the mesencephalon from the dorsal column nuclei: An anatomical study in the cat. *Brain Res.*, **311**: 225–244.